socket mobile

USERGUIDE

CHARGING STAND

PACKAGE CONTENTS

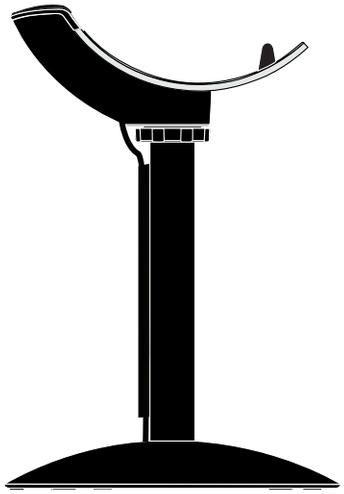

Charging Stand

Micro USB
Charging Cable

User Guide

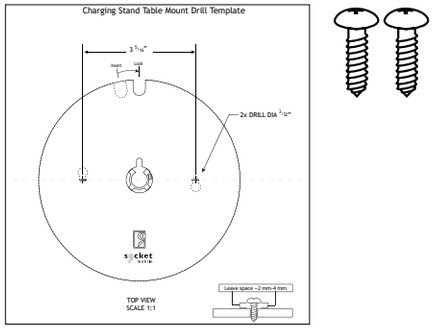

*Table Mounting
Template

*Security Cable

*Optional

© 2019 Socket Mobile, Inc. All rights reserved. Socket®, the Socket Mobile logo, SocketScan®, DuraScan®, Battery Friendly® are registered trademarks or trademarks of Socket Mobile, Inc. Microsoft® is a registered trademark of Microsoft Corporation in the United States and other countries. Apple®, iPad®, iPad Mini®, iPhone®, iPod Touch®, and Mac iOS® are registered trademarks of Apple, Inc., registered in the U.S. and other countries. The Bluetooth® Technology word mark and logos are registered trademarks owned by the Bluetooth SIG, Inc. and any use of such marks by Socket Mobile, Inc. is under license. Other trademarks and trade names are those of their respective owners.

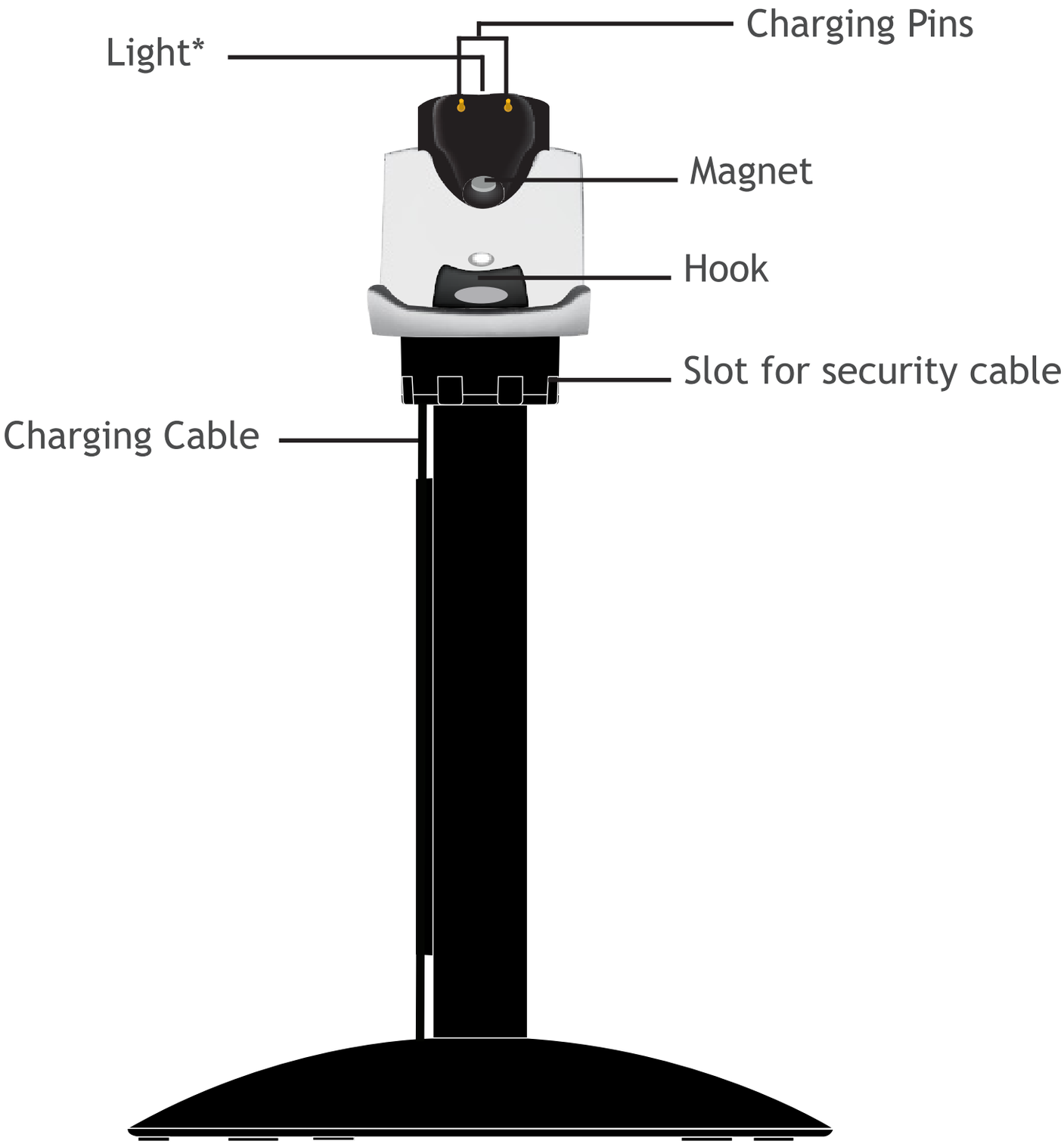

*Illuminates Red when connected to AC Power.

*ATTACHING THE SECURITY CABLE

Step 1

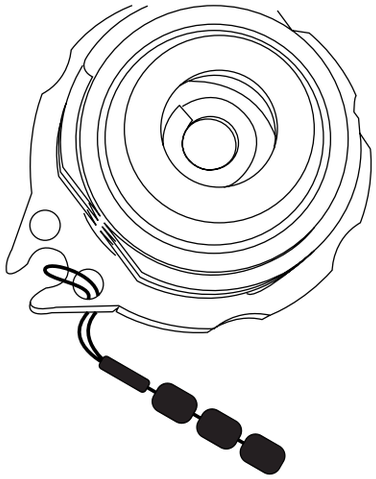

Step 2

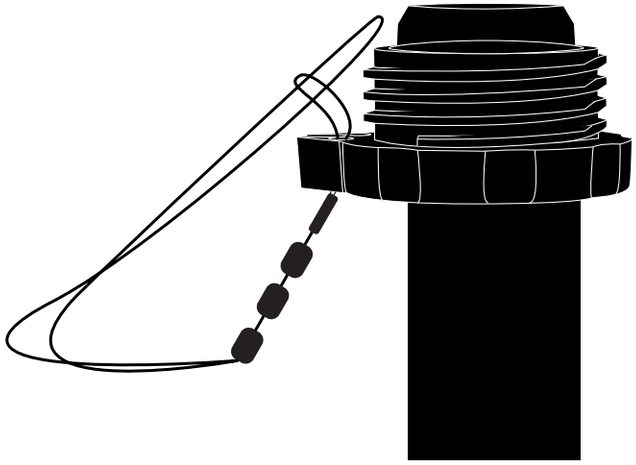

Step 3

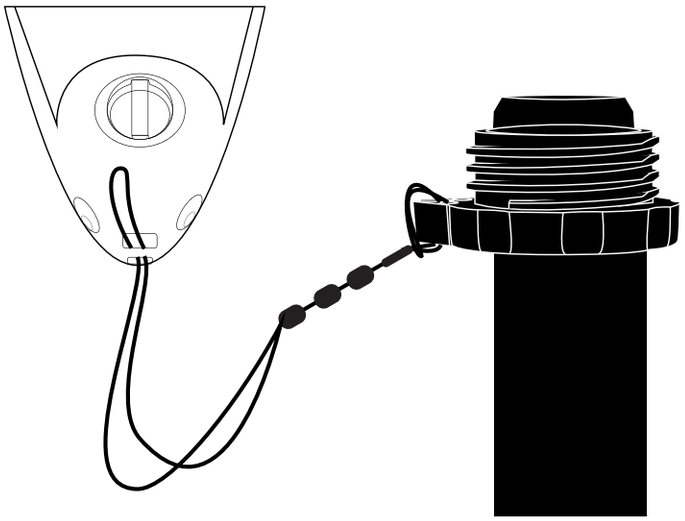

Step 4

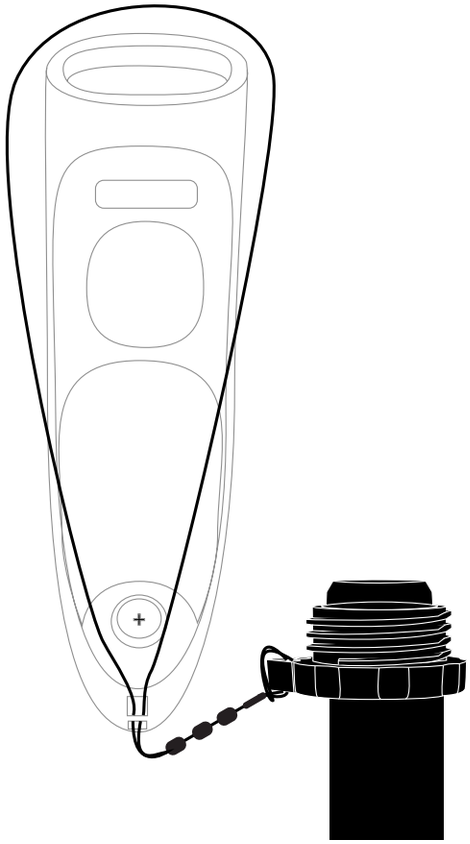

*Security cable comes Pre-installed for your convenience. To remove, follow step 2 and step 1.

INSERTING THE POST TO THE BASE

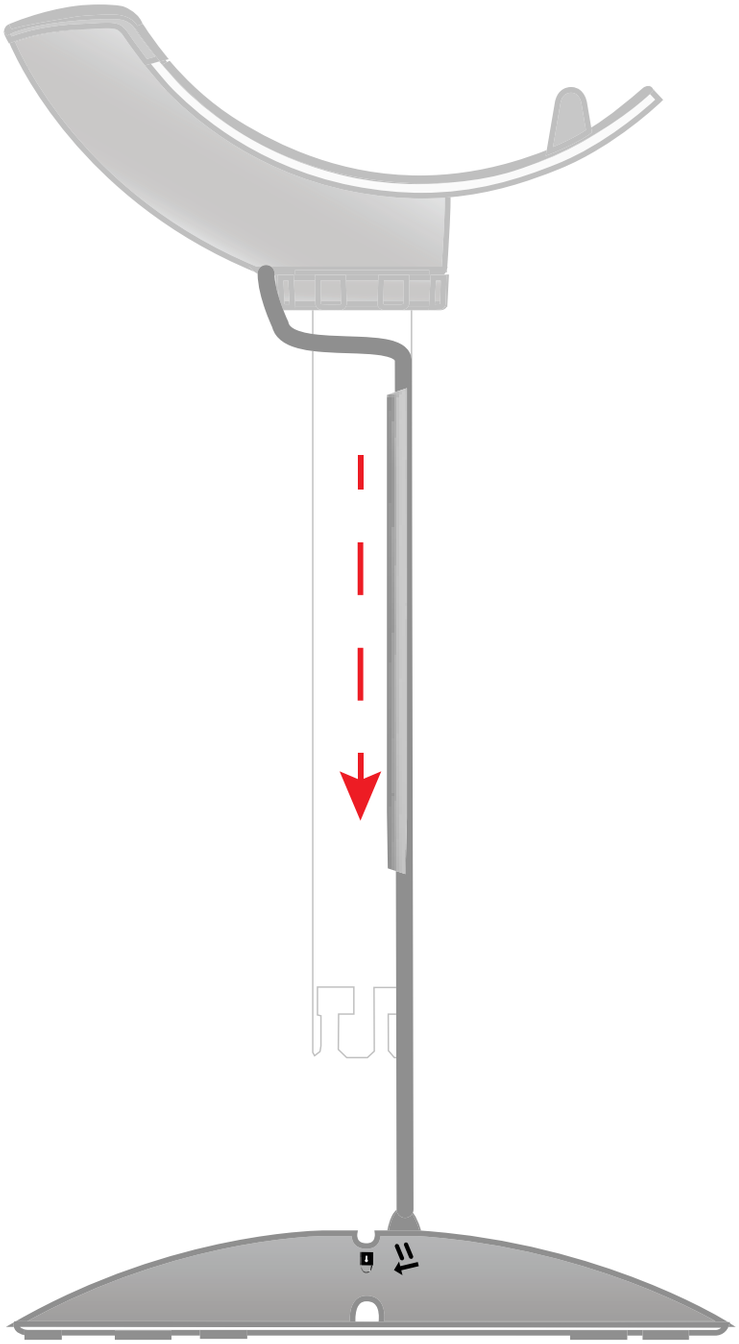

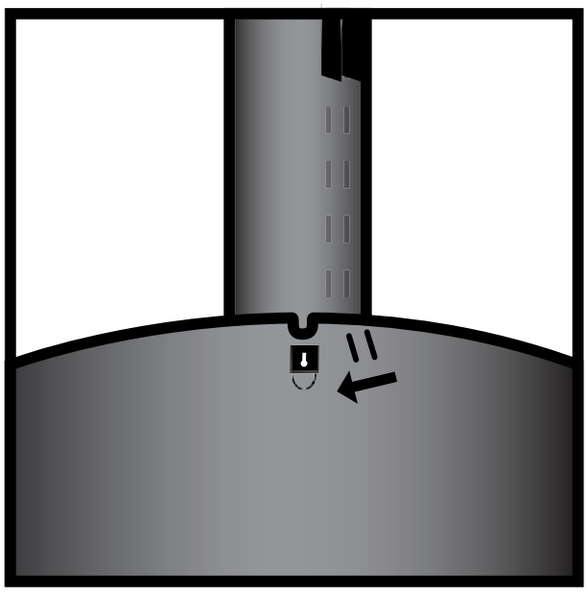

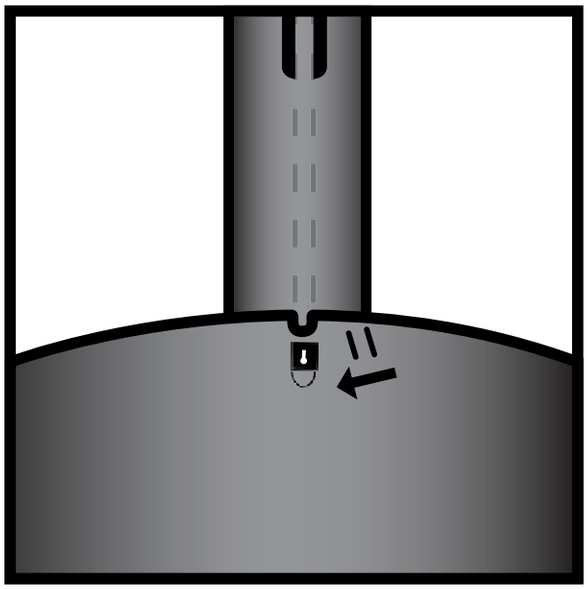

Insert the post into the top of the base, lining up the marker on the post to the unlock icon. Push down and turn the post towards the lock icon until you hear a click. Run the USB cord through the channel at the bottom of the base.

The charging pins must align to supply power to the scanner. The red light will illuminate and the scanner will beep twice.

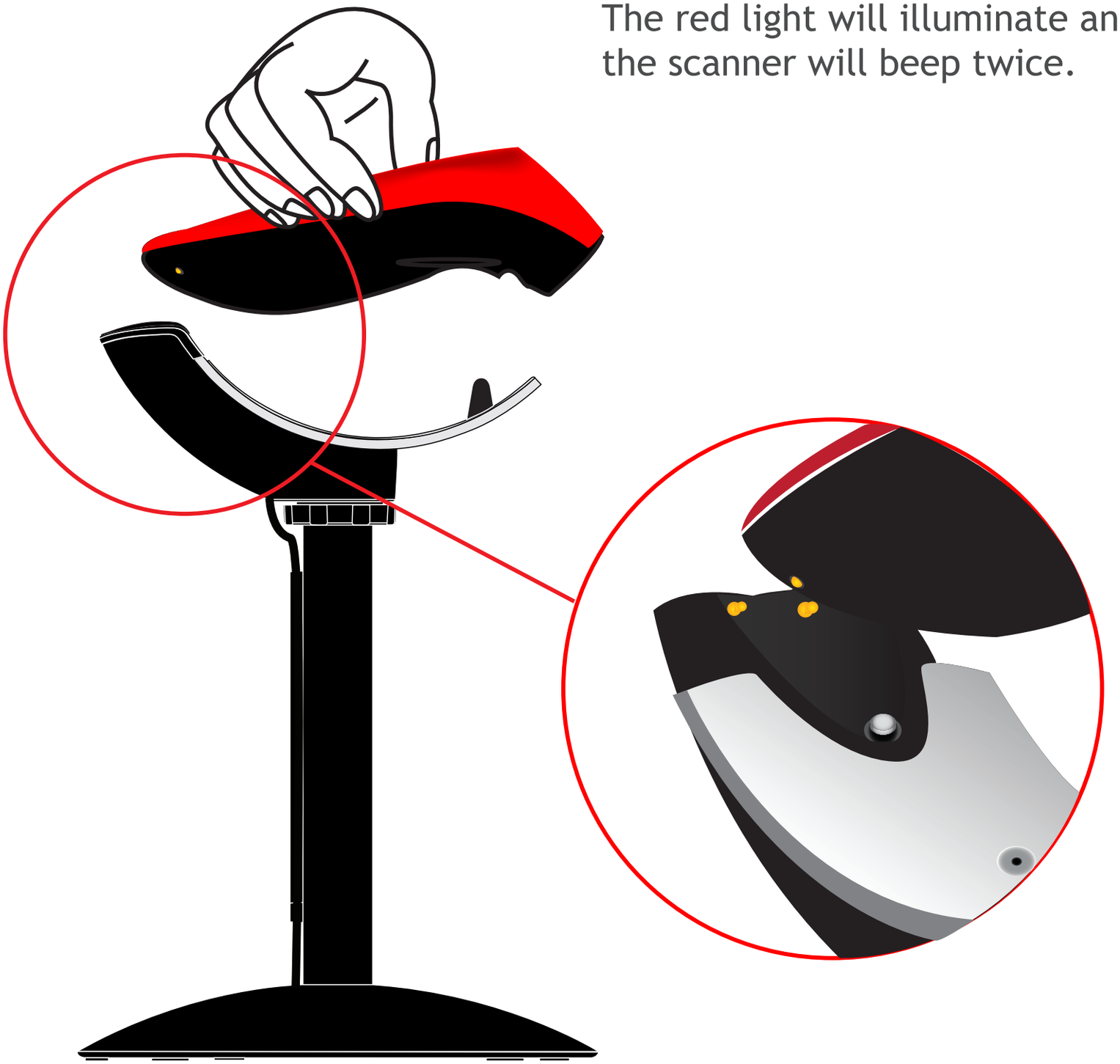

*When set to Auto Scan with Socket Mobile's 2D barcode scanners (7Qi, 7Xi, D740, D750, D760, S740, S760), the barcode should be 4 to 8 inches away.

Two keyholes are provided on the Charging Stand base for an optional installation on a wooden surface (screws and drill template included).

1. Place the Charging Stand on the drill template and position these in the desired location. Rotate the Charging Stand to align with the solid notch (not the dotted notch) on the template.
2. Rotate the Stand/template combination so the Socket Mobile logo faces the direction you want the scanner to aim.
3. Tape the template to the surface and remove the Charging Stand.
4. Drill two $^{3}/_{32}$” holes through the drill marks on the template.
5. Tighten the two screws with about $^{1}/_{4}$” of the screw head exposed.
6. Place the Charging Stand on the template aligned with the dotted notch.
7. You can now tear away the template.
8. Twist the Charging Stand clockwise to lock the screws in the keyholes.

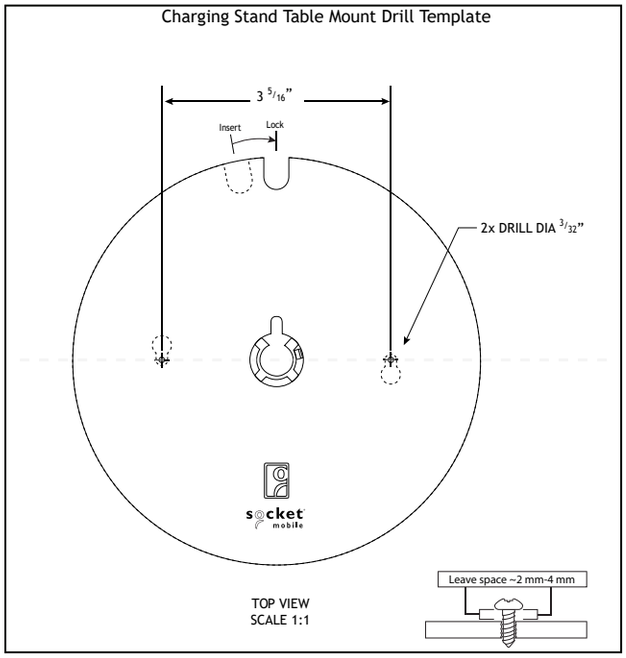

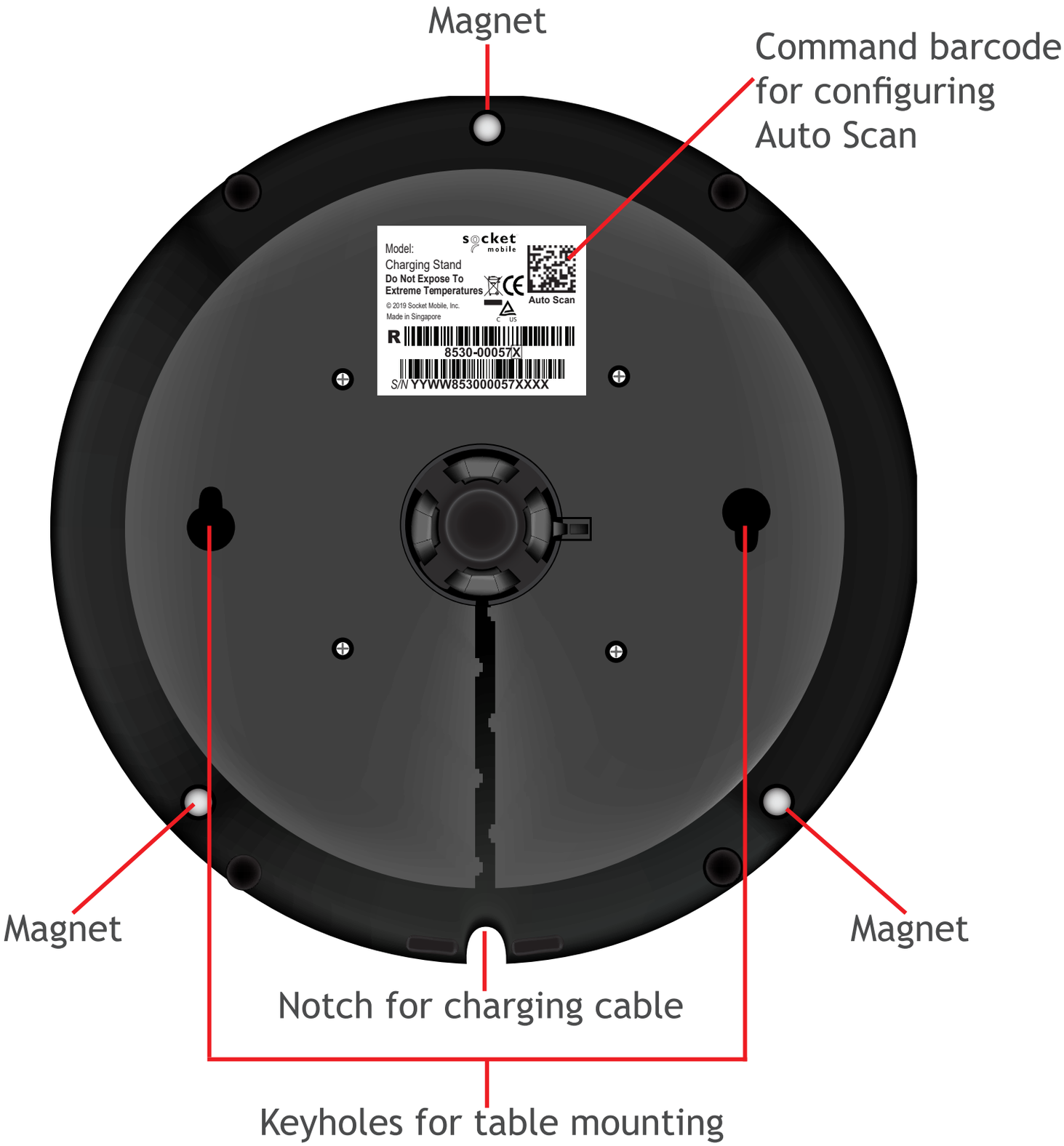
Magnet
Command barcode for configuring Auto Scan
Model:
Charging Stand
Do Not Expose To Extreme Temperatures
© 2019 Socket Mobile, Inc.
Made in Singapore
Auto Scan
8530-00057X
S/N YYWW853000057XXXX
Magnet
Magnet
Notch for charging cable
Keyholes for table mounting

Charging Stand Modes	
Auto Scan Scan the barcode to enable Auto Scan. This will allow the scanner to automatically scan barcodes without pressing the scan button.	#FNB 41FBA50003#
Manual Mode - Normal (default) Scan the barcode to configure the scanner back to normal. It will be in manual scan mode even when placed in the stand or cradle.	#FNB 41FBA50000#

Charging Stand Modes	
Stand Mode* Scan the barcode to configure the scanner is permanently in Auto Scan mode, regardless whether it is connected to power or not.	#FNB 41FBA50001#

*This mode will drain the battery faster if not connected to power.

1. Scan command barcode to place your scanner in Auto Scan.

Note: Turn off host device's Bluetooth before scanning command barcode.

2. Once the scanner is in Auto Scan, it will switch to automatic scanning when it detects power coming from the charging pins of the Dock or Stand. Place a barcode in the scanners field of view and the scanner will automatically scan it.

***Supported 2D Scanners:**
7Qi, 7Xi, D740, D750, D760, S740, and S760

How Auto Scanning Mode Works in the Stand or Dock

Action	Behavior	Notification		
		Beep Pattern	Light Activity	Vibrate
Place Scanner in the Stand	Scanner switches to Auto Scan Mode	High-high tone confirms proper seating*	Battery Status Light is Disabled	None
Place a barcode in the Scanners Field of View	Decode barcode	1 Beep when Data successfully scanned	Green Light blinks (while scanning)	None

How the Scanner reverts to Manual Mode (Not in the Stand)

Action	Behavior	Notification		
		Beep Pattern	Light Activity	Vibrate
Remove the Scanner from the Stand and press the scan button	Scanner switches to Manual Mode	None	Battery Status Light is Enabled	Enabled
Press the scan button	Decode barcode	1 Beep when Data successfully scanned	Green Light blinks (while scanning)	Vibrate when Data successfully scanned

Auto Scanning Mode: Barcodes placed in the Scanner's field of view are automatically scanned.
Manual Mode (default): Pressing the scan button initiates a scan.

Dimensions	
Stand Height	6.5 in (165 mm)
Charging Mount Width	1.80 in (46 mm)
Charging Mount Length	5.50 in (140 mm)
Base Diameter	5.75 in (146mm)
Total Weight	
Without Scanner and Power Adapter	12.7 oz (360 g)
Antimicrobial Rating	JLS z2801:2000 Test: 2.49 on MRSA 6.07 when cleaned with SaniCloth Plus cloth wipes Biosafe HM4100, EPA#83019-1

HELPFUL RESOURCES

Technical Support and Product Registration: support.socketmobile.com
Phone: 800-279-1390 +1-510-933-3020 (worldwide)

Warranty Checker: socketmobile.com/warranty-checker

Socket Mobile Developer Program: socketmobile.com/developer

Download Socket Mobile's scanner User Guide and Command Barcodes at socketmobile.com/downloads

COMPLIANCE STATEMENT

CE MARKING AND EUROPEAN UNION COMPLIANCE
The unit under test was found compliant with all the applicable Directives, 2004/108/EC and 2006/95/EC.

WASTE ELECTRICAL AND ELECTRONIC EQUIPMENT
The WEEE directive places an obligation on all EU-based manufacturers and importers to take-back electronic products at the end of their useful life.

ROHS STATEMENT OF COMPLIANCE
This product is compliant to Directive 2011/65/EU.

NON-MODIFICATION STATEMENT
Changes or modifications not expressly approved by the party responsible for compliance.

2019 6430-00358G Printed in U.S.A.